Instructions For Use

J-Lite
JLA-8.1000 and JLA-9.1000
Fixed-Angle Rotor Assemblies

For Use in Beckman Coulter
Avanti J Series Centrifuges

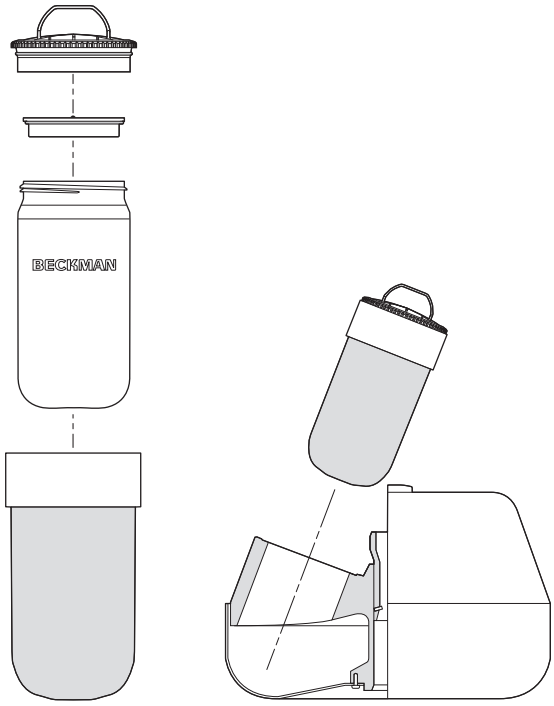

PN J-TB-073GR
January 2023

Beckman Coulter, Inc.
250 S. Kraemer Blvd.
Brea, CA 92821 U.S.A.

BECKMAN COULTER

J-Lite JLA-8.1000 and JLA-9.1000
Fixed-Angle Rotor Assemblies
For Use in Beckman Coulter Avanti J Series Centrifuges
PN J-TB-073GR (January 2023)

© 2023 Beckman Coulter, Inc.
All rights reserved

Beckman Coulter, the stylized logo, and the Beckman Coulter product and service marks mentioned herein are trademarks or registered trademarks of Beckman Coulter, Inc. in the United States and other countries.

All other trademarks, service marks, products, or services are trademarks or registered trademarks of their respective holders.

Contact Us
If you have any questions, contact our Customer Support Center.

- Worldwide, find us via our website at *www.beckman.com/support/technical*
- In the USA and Canada, call us at 1-800-369-0333.
- In Austria, call us at 0810 300484
- In Germany, call us at 02151 333999
- In Sweden, call us at +46 (0)8 564 859 14
- In Netherlands, call us at +31 348 799 815
- In France, call us at 0825838306 6
- In the UK, call us at +44 845 600 1345
- In Ireland, call us at +353 (01) 4073082
- In Italy, call us at +39 0295392 456
- In other locales, contact your local Beckman Coulter Representative.

Find us on the World Wide Web at: **www.beckman.com**

EC REP

Beckman Coulter Eurocenter S.A.
22, rue Juste-Olivier
Case Postale 1044
CH - 1260 Nyon 1, Switzerland
Tel: +41 (0) 22 365 36 11

Glossary of Symbols is available at beckman.com/techdocs (PN C24689).

May be covered by one or more pat. - see www.beckman.com/patents

Original Instructions

Revision History

For updates, go to www.beckman.com/techdocs and download the latest version of the manual or system help for your instrument.

Issue GD, 10/15
Changes or additions were made in the following:
- *Loading the Canisters*
- *Using the Bottle Grip*

Issue GE, 5/17
Changes or additions were made in the following:
- *Additional information for the safe use of the J-Lite JLA-8.000 and JLA-1.000 rotor assemblies. Please read before use.*
- *Loading the 1000-mL Bottle and Labware Assemblies*
- *Using the Bottle Grip*

Issue GF, 9/17
Changes or additions were made in the following:
- *Additional information for the safe use of the J-Lite JLA-8.1000 and JLA-1.000 rotor assemblies. Please read before use.*
- *Description*
- *Bottles and Tubes*
- *Loading the 1000-mL Bottle and Labware Assemblies*
- *Cap/Closure and Plug Inspection and Maintenance*
- *Replacement Rotor Parts and Labware*

Issue GG, 3/18
Changes or additions were made in the following:
- *Bottle Grip and Wrench (Kit 366770)*
- *Using the Bottle Grip*
- *Replacement Rotor Parts and Labware*

Issue GH, 5/18
Changes or additions were made in the following:
- *Using the Bottle Grip*
- *Replacement Rotor Parts and Labware*

Issue GJ, 6/18
Changes or additions were made in the following:
- *Additional information for the safe use of the J-Lite JLA-8.1000 and JLA-1.000 rotor assemblies. Please read before use.*
- *1L HarvestLine System Liners*
- *Replacement Rotor Parts and Labware*

Issue GK, 4/19
Changes or additions were made in the following:
- *Rotor Body Inspection and Maintenance*
- *Supplies*

Issue GL, 6/20

Changes or additions were made in the following:

- *Additional information for the safe use of the J-Lite JLA-8.1000 and JLA-1.000 rotor assemblies. Please read before use.*
- *Specifications for the JLA-8.1000 Fixed-Angle Rotor Assembly*
- *Specifications for the JLA-9.1000 Fixed-Angle Rotor Assembly*
- *Description*
- *Preparation and Use*
- *Sterilization and Disinfection*
- *Replacement Rotor Parts and Labware*

Issue GM, 10/20

Changes or additions were made in the following:

- *Bottles and Tubes*
- *Sterilization and Disinfection*
- *Cap/Closure Tightening Tools*

Issue GN, 12/21

Changes or additions were made in the following:

- *Table 1*
- *Cap/Closure Tightening Tools*

Issue GP, 01/22

Changes or additions were made in the following:

- *Table 1*

Issue GR, 01/23

Changes or additions were made in the following:

- *Safety Notice*
- *Table 1*
- *Replacement Rotor Parts and Labware*

Note: *Changes that are part of the most recent revision are indicated in text by a bar in the left margin of the amended page.*

Safety Notice

Read all product manuals and consult with Beckman Coulter-trained personnel before attempting to use this equipment. Do not attempt to perform any procedure before carefully reading all instructions. Always follow product labeling and manufacturer's recommendations. If in doubt as to how to proceed in any situation, contact your Beckman Coulter Representative.

Beckman Coulter, Inc. urges its customers and employees to comply with all national health and safety standards such as the use of barrier protection. This may include, but is not limited to, protective eyewear, gloves, and suitable laboratory attire when operating or maintaining this or any other laboratory centrifuge.

This safety notice summarizes information basic to the safe use of the rotor described in this manual. The international symbol displayed to the left is a reminder to the user that all safety instructions should be read and understood before operation or maintenance of this equipment is attempted. When you see the symbol on other pages of this publication, pay special attention to the safety information presented. Observance of safety precautions will also help to avoid actions that could damage or adversely affect the performance of the rotor. This rotor was developed, manufactured, and tested for safety and reliability as part of a Beckman Coulter centrifuge/rotor system. Its safety or reliability cannot be assured if used in a centrifuge not of Beckman Coulter's manufacture or in a Beckman Coulter centrifuge that has been modified without Beckman Coulter's approval.

WARNING

If the equipment is used in a manner not specified by Beckman Coulter, Inc., the protection provided by the equipment may be impaired.

CAUTION

If you purchased this product from anyone other than Beckman Coulter or an authorized Beckman Coulter distributor, and, if it is not presently under a Beckman Coulter Service Maintenance Agreement, Beckman Coulter cannot guarantee that the product is fitted with the most current mandatory engineering revisions or that you will receive the most current information bulletins concerning the product. If you purchased this product from a third party and would like further information concerning this topic, Contact Us.

Alerts for Warning, Caution, Important, and Note

⚠ WARNING

WARNING indicates a potentially hazardous situation which, if not avoided, could result in death or serious injury.

⚠ CAUTION

CAUTION indicates a potentially hazardous situation, which, if not avoided, may result in minor or moderate injury.

IMPORTANT IMPORTANT is used for comments that add value to the step or procedure being performed. Following the advice in the Important adds benefit to the performance of a piece of equipment or to a process.

NOTE NOTE is used to call attention to notable information that should be followed during installation, use, or servicing of this equipment.

Safety Information for the J-Lite JLA-8.1000 and JLA-9.1000 Fixed-Angle Rotor Assemblies

IMPORTANT This rotor was developed, manufactured, and tested for safety and reliability as part of a Beckman Coulter centrifuge/rotor system. Its safety or reliability cannot be assured if used in a centrifuge not of Beckman Coulter's manufacture or in a Beckman Coulter centrifuge that has been modified without Beckman Coulter's approval.

These rotors were developed, manufactured, and tested for safety and reliability as part of a Beckman Coulter centrifuge/rotor system. Their safety or reliability cannot be assured if used in a centrifuge not of Beckman Coulter's manufacture or in a Beckman Coulter centrifuge that has been modified without Beckman Coulter's approval.

Handle body fluids with care because they can transmit disease. No known test offers complete assurance that such fluids are free of micro-organisms. Some of the most virulent—Hepatitis (B and C) viruses, HIV (I–V), atypical mycobacteria, and certain systemic fungi—further emphasize the need for aerosol protection. Handle other infectious samples according to good laboratory procedures and methods to prevent spread of disease. Because spills may generate aerosols, observe proper safety precautions for aerosol containment. Do not run toxic, pathogenic, or radioactive materials in this rotor without taking appropriate safety precautions. Biosafe containment should be used when Risk Group II materials (as identified in the World Health Organization *Laboratory Biosafety Manual*) are handled; materials of a higher group require more than one level of protection.

The rotor s and accessories are not designed for use with materials capable of developing flammable or explosive vapors. Do not centrifuge such materials in nor handle or store them near the centrifuge.

If disassembly reveals evidence of leakage, you should assume that some fluid escaped the rotor. Apply appropriate decontamination procedures to the centrifuge and accessories as required.

Never exceed the maximum rated speed of the rotor and labware in use. Refer to the section on *Run Speeds*.

Do not use sharp tools on these rotors that could cause scratches in the rotor surface. Corrosion begins in scratches and may open fissures in the rotor with continued use.

Additional information for the safe use of the J-Lite JLA-8.1000 and JLA-1.000 rotor assemblies. Please read before use.

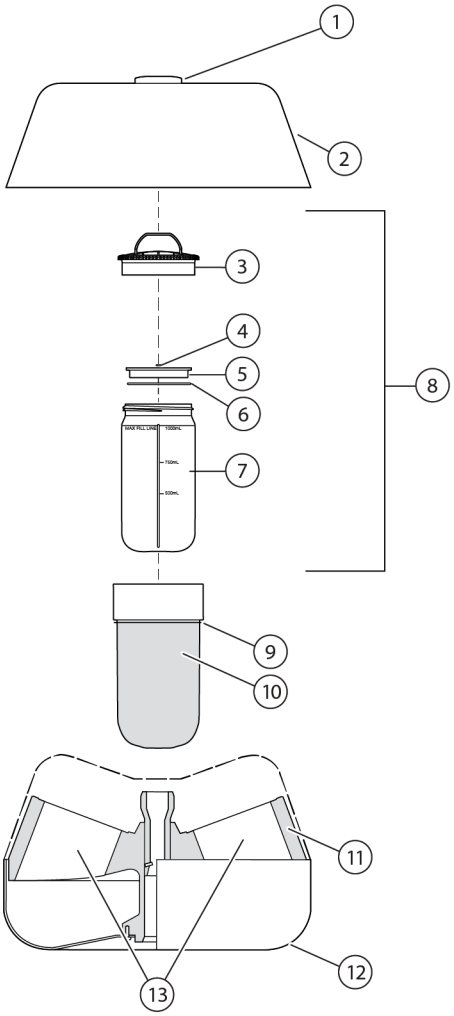

1. Tie Down Knob
2. Lid
3. Cap/Closure
4. AutoVent Plug O-ring
5. AutoVent Plug
6. Quad Ring or Plug O-ring
7. Bottle, 1000 mL (polycarbonate or polypropylene)
8. Labware Assembly
9. Canister Sleeve Washer
10. Canister
11. Rotor Body
12. Windshield
13. Rotor Cavities

- Use all rotor components during each run, as shown. Six canisters must be run at all times in the JLA-8.1000, and four in the JLA-9.1000, whether loaded or empty. Do not place cap/ closures on top of empty canisters.
- NEVER load sample directly into a canister. Load sample into a bottle, seal the bottle with a plug and a cap/closure as described in this manual, and place the sealed bottle inside a canister.
- NEVER place a bottle directly into a rotor cavity. Place filled, sealed labware assemblies in canisters, previously installed in the rotor body.

- Check cap/closures, plugs, and their seals before each run to ensure that they are in good condition. The cap/closures must be free of crazing or other defects. The plug and seals must be free of defects, and must be dry and unlubricated to ensure seal integrity.
- Before each use, inspect each bottle, cap/closure, and plug for cracks or damage. *Do not use damaged components.*
- Place filled canisters in at least two opposing cavities; place empty canisters in the other cavities. Make sure that filled canisters are loaded symmetrically into the rotor and that opposing containers are filled to the same level with liquid of the same density.
- When loading the bottle assembly into the rotor, always orient the fill line indicator on the side of the bottle at 90 degrees relative to the axis of rotation.
- Place the rotor lid on top of the rotor body and securely fasten the round tie-down knob.
- Opposing filled canisters, plus labware and sample, must weigh within 30 grams of each other.
- Although rotor components and accessories made by other manufacturers may fit in the JLA-8.1000 and JLA-9.1000 rotors, their safety in these rotors cannot be ascertained by Beckman Coulter. Use of other manufacturers' components or accessories in these rotors may void the rotor warranty and should be prohibited by your laboratory safety officer. Use only the components and accessories listed in this publication in these rotors.
- Do not exceed the rated maximum sample load for any single canister, which is 1500 grams (3.3 lb.), including bottle, sample, plug, and cap/closure.

Safety During Installation and/or Maintenance

⚠ WARNING

Risk of injury or equipment damage. Vapors from flammable reagents or combustible fluids could enter the centrifuge air system and be ignited by the motor. Do not use the centrifuge in the vicinity of flammable liquids or vapors, and do not run such materials in the instrument.

⚠ CAUTION

Risk of equipment damage. Corrosion begins in scratches and may open fissures in the rotor, carriers, and carriages with continued use. Do not use sharp tools on the rotor that could cause scratches in the rotor surface carrier and carriage surfaces.

Perform only the maintenance described in *Maintenance*.

IMPORTANT It is your responsibility to decontaminate components of the instrument before requesting service by a Beckman Coulter Representative or returning parts to Beckman Coulter for repair. Beckman-Coulter will NOT accept any items which have not been decontaminated where it is appropriate to do so. If any parts are returned, they must be enclosed in a sealed plastic bag stating that the contents are safe to handle and are not contaminated.

Any servicing of this equipment that requires removal of any covers can expose parts that involve the risk of electric shock or personal injury. Make sure that the power switch is off and the centrifuge is disconnected from the main power source by removing the Mains (power) plug from the outlet receptacle, and refer such servicing to qualified personnel.

Do not replace any centrifuge components with parts not specified for use on this instrument.

WARNING

Risk of personal injury. Use appropriate lifting techniques when installing this rotor into or removing it from the instrument.

Radiation Safety

Use universal precautions when working with radioactive materials. Means must be available to decontaminate the instrument and dispose of radioactive waste.

Chemical and Biological Safety

Use universal precautions when working with pathogenic materials. Means must be available to decontaminate the instrument and to dispose of biohazardous waste.

NOTE Observe all warnings and cautions listed for any external devices attached or used during operation of the instrument. Refer to applicable external device user's manuals for operating procedures of that device.

NOTE For Safety Data Sheets (SDS) information, go to the Beckman Coulter website at https://www.beckman.com/techdocs.

WARNING

Risk of chemical injury from bleach. To avoid contact with the bleach, use barrie protection, including protective eyewear, gloves, and suitable laboratory attire. Refer to the Safety Data Sheet for details about chemical exposure before using the chemical.

WARNING

Risk of personal injury or equipment damage. Ethanol is a flammability hazard. Do not use it in or near operating or powered centrifuges.

WARNING

Risk of personal injury or property damage. The rotors and accessories are not designed for use with materials capable of developing flammable or explosive vapors. Do not centrifuge such materials in, nor handle or store them near the centrifuge.

WARNING

Risk of personal injury or contamination. Before running the centrifuge with chemical or biological samples, test new labware types to determine if normal operation of the rotor may involve the use of materials that are toxic or otherwise biologically harmful. When using such materials, observe the following precautions:

- **Handle infectious samples according to good laboratory procedures and methods to prevent the spread of disease.**
- **Observe all cautionary information printed on the original solutions' containers prior to their use.**
- **Dispose of all waste solutions according to your facility's waste disposal procedures.**
- **Operate the instrument in accordance with the instructions outlined in this manual and take all the necessary precautions when using pathological, toxic, or radioactive materials.**
- **Splashing of liquids may occur; therefore, take appropriate safety precautions, such as using safety glasses and wearing protective clothing, when working with potentially hazardous liquids.**
- **Use an appropriately-contained environment when using hazardous materials.**
- **Observe the appropriate cautionary procedures as defined by your safety officer when using flammable solvents in or near a powered-up instrument.**
- **Always observe appropriate cautionary procedures as defined by your safety officer when using flammable solvents or toxic, pathological, or radioactive materials.**

Mechanical Safety

⚠ WARNING

Risk of personal injury. To avoid injury due to moving parts, observe the following:

- **Before starting the centrifuge, make sure that the rotor tie-down screw is securely fastened.**
- **Never attempt to exchange labware or reagents while the instrument is operating.**
- **Never attempt to physically restrict any of the moving components of the instrument.**
- **NEVER attempt to slow or stop a rotor by hand.**
- **Keep the instrument work area clear to prevent obstruction of the movement.**

Rotors are designed for use at the speeds indicated; however, speed reductions may be required because of weight considerations of tubes, adapters, and/or the density of the solution being centrifuged. Be sure to observe the instructions in the applicable rotor manual.

The strength of containers can vary between lots, and will depend on handling and usage. We highly recommend that you pretest them in the rotor (using buffer or gradient of equivalent density to the intended sample solution) to determine optimal operating conditions.

To help prevent premature failures or hazards by detecting stress corrosion, metal fatigue, wear or damage to anodized coatings, and to instruct laboratory personnel in the proper care of rotors, Beckman Coulter offers the Field Rotor Inspection Program (FRIP). This program involves a visit to your laboratory by a specially trained Beckman Coulter representative, who will inspect all of your rotors for corrosion or damage. The representative will recommend repair or replacement of at risk rotors to prevent potential rotor failures. Contact Us to request this service.

Cleaning

Observe the cleaning procedures outlined in this user's manual for the rotor. Prior to cleaning equipment that has been exposed to hazardous material:

- Contact the appropriate Chemical and Biological Safety personnel.
- Review the Chemical and Biological Safety information in the user's manual.

Maintenance

Perform only the maintenance described in this manual. Maintenance other than that specified in this manual should be performed only by your Beckman Coulter Representative.

IMPORTANT It is your responsibility to decontaminate components of the instrument before requesting service by a Beckman Coulter Representative or returning parts to Beckman Coulter. Beckman Coulter will NOT accept any items which have not been decontaminated where it is appropriate to do so. If any parts are returned, they must be enclosed in a sealed plastic bag stating that the contents are safe to handle and are not contaminated.

Disposal

Clean and decontaminate the rotor per the Care and Maintenance section of this manual before disposal. Users are encouraged to check with local waste disposal authorities for specific disposal requirements.

Contents

Revision History, iii

Safety Notice, v

Alerts for Warning, Caution, Important, and Note, vi

Safety Information for the J-Lite JLA-8.1000 and JLA-9.1000 Fixed-Angle Rotor Assemblies, vi

Additional information for the safe use of the J-Lite JLA-8.1000 and JLA-1.000 rotor assemblies. Please read before use., vii

Safety During Installation and/or Maintenance, viii

Radiation Safety, ix

Chemical and Biological Safety, ix

Mechanical Safety, xi

Cleaning, xi

Maintenance, xii

Disposal, xii

J-Lite JLA-8.1000 and JLA-9.1000 Fixed-Angle Rotor Assemblies, 1

Specifications for the JLA-8.1000 Fixed-Angle Rotor Assembly, 1

Specifications for the JLA-9.1000 Fixed-Angle Rotor Assembly, 2

Description, 3

Preparation and Use, 4

Bottles and Tubes, 5

1L HarvestLine System Liners, 8

Prerun Safety Checks, 9

Rotor Preparation, 9

Installing the Rotor, 10

Loading the Canisters, 11

Working with Physiological Fluids, 11

Loading the 1000-mL Bottle and Labware Assemblies, 11

Cap/Closure Tightening Tools, 13

Loading the 500-mL Adapters, 15

Temperature, 16

Removal and Sample Recovery, 16

Removing 1000-mL Bottles, 16

Removing Pellets from 1000-mL Bottles, 17

Removing 500-mL Adapters, 17

Run Times, 17
Run Speeds, 18

Care and Maintenance, 20
Cap/Closure and Plug Inspection and Maintenance, 20
Canister Inspection and Maintenance, 21
About Composite Canisters, 22
Rotor Body Inspection and Maintenance, 23
Cleaning, 24
Decontamination, 25
Sterilization and Disinfection, 26

Returning a Rotor, 27

Supply List, 27
Replacement Rotor Parts and Labware, 28
Supplies, 32

Beckman Coulter, Inc.
JLA-8.1000 and JLA-9.1000 Rotor Warranty

Illustrations

1 The JLA-8.1000 Fixed-Angle, 3

2 The JLA-9.1000 Fixed-Angle Rotor, 4

3 1 000-mL Bottle Assemblies Used in the JLA-8.1000 and JLA-9.1000 Rotor Assemblies, 7

4 The 500-mL Adapter for the JLA-8.1000 and JLA-9.1000 Rotors, 8

5 Installing the Rotor (JLA-9.1000 shown), 10

6 PN 366770, 13

7 PN C24141, 13

8 PN 858121, 14

9 canister Sleeve Washer, 21

10 canister Dome Area, 22

11 Lubricating the Lid Stem, 24

Tables

1 Bottles and Tubes Used in the JLA-8.1000 and JLA-9.1000 Rotors, 5

2 Relative Centrifugal Fields for the JLA-8.1000 and JLA-9.1000 Rotors, 19

J-Lite JLA-8.1000 and JLA-9.1000 Fixed-Angle Rotor Assemblies

Specifications for the JLA-8.1000 Fixed-Angle Rotor Assembly

NOTE The JLA-8.1000 rotor can be used in Avanti JXN-26, J-26S XP series, Avanti J-26 XP series, and in discontinued Avanti J-20 series and Avanti J-20 XP series centrifuges only.

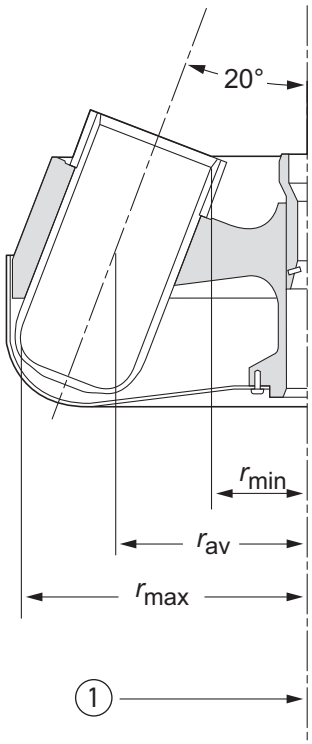

1. Axis of Rotation

Maximum speed	8000 RPM
Critical speed range[a]	200 to 400 RPM
Maximum solution density	1.2 g/mL
Relative Centrifugal Field[b] at maximum speed	
At r_{max} (222.8 mm)	$15{,}970 \times g$
At r_{av} (171 mm)	$12{,}300 \times g$
At r_{mins} (119 mm)	$8530 \times g$
k factor at maximum speed (full 1000-ml bottle)	2482
Conditions requiring speed reductions	see *Run Speeds*
Number of removable canisters	6
Available bottle and tubes	see Table 1
Nominal dimensions of largest bottle	95 × 191 mm
Nominal bottle capacity	1000 mL
Nominal rotor capacity	6 liters
Weight of fully loaded rotor (with lid)	34.6 kg (76 lb)
Minimum installation weight (rotor body and windshield	16.8 kg (37 lb)
Weight of single empty canister	630 gams (1.4 lb)
Maximum sample load for each canister at rated speed (including bottle, plug, cap/closure, and sample)	1500 grams (3.3 lb)
Approximate acceleration time to maximum speed (rotor fully loaded)	6 min
Approximate deceleration time from maximum speed (rotor fully loaded, max. brake)	3 min
Maximum allowable imbalance of opposing loads	30 grams
Rotor body material	aluminum
Canister material	carbon fiber epoxy composite
Plug material	polypropylene (PP) or polyetherimide (PEI)
Cap/closure material	polyphenylsulfone (PPSU) or polyphenylene sulfide (PPS)

a. The critical speed range is the range of speeds over which the rotor shifts so as to rotate about its center of mass. Passing through the critical speed range is characterized by some vibration.

Specifications for the JLA-9.1000 Fixed-Angle Rotor Assembly

NOTE Before the JLA-9.1000 rotor can be used in an Avanti J series centrifuge shipped before January 1998, a field upgrade of the centrifuge is required. Contact Beckman Coulter Field Service for information.

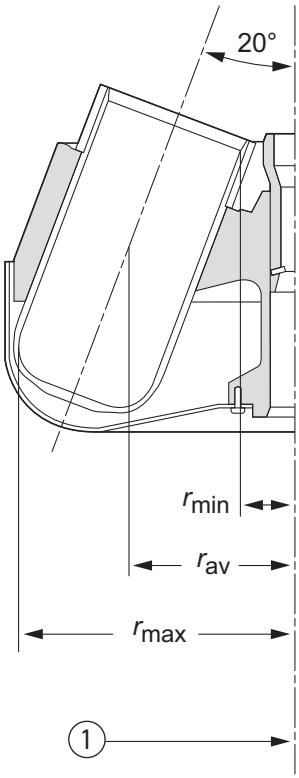

1. Axis of Rotation

Maximum speed	9000 RPM
Critical speed range[a]	200 to 400 RPM
Maximum solution density	1.2 g/mL
Relative Centrifugal Field[b] at maximum speed	
At r_{max} (185 mm)	$16{,}800 \times g$
At r_{av} (143 mm)	$12{,}200 \times g$
At r_{mins} (82 mm)	$7440 \times g$
k factor at maximum speed (full 1000-ml bottle)	2544
Conditions requiring speed reductions	see *Run Speeds*
Number of removable canisters	4
Available bottle and tubes	see Table 1
Nominal dimensions of largest bottle	95 × 191 mm
Nominal bottle capacity	1000 mL
Nominal rotor capacity	4 liters
Weight of fully loaded rotor (with lid)	20.8 kg (45.9 lb)
Minimum installation weight (rotor body and windshield	10.8 kg (23.9 lb)
Weight of single empty canister	630 gams (1.4 lb)
Maximum sample load for each canister at rated speed (including bottle, plug, cap/closure, and sample))	1500 grams (3.3 lb)
Approximate acceleration time to maximum speed (rotor fully loaded)	2 1/2 min
Approximate deceleration time from maximum speed (rotor fully loaded, max. brake)	3 min
Maximum allowable imbalance of opposing loads	30 grams
Rotor body material	aluminum
Canister material	carbon fiber epoxy composite
Plug material	polypropylene (PP) or polyetherimide (PEI)
Cap/closure material	polyphenylsulfone (PPSU) or polyphenylene sulfide (PPS)

a. The critical speed range is the range of speeds over which the rotor shifts so as to rotate about its center of mass. Passing through the critical speed range is characterized by some vibration.

b. Relative Centrifugal Field (RCF) is the ratio of the centrifugal acceleration at a specified radius and speed ($r\omega^2$) to the standard acceleration of gravity (g) according to the following formula: $RCF = r\omega^2/g$ — where r is the radius in millimeters, ω is the angular velocity in radians per second (2π RPM /60), and g is the standard acceleration of gravity (9807 mm/s^2). After substitution: $RCF = 1.12r\,(RPM/1000)^2$

Description

These rotors have been manufactured in a facility that maintains certifications to both ISO 9001 and ISO 13485. They are for use in the specified Beckman Coulter centrifuges.

The J-Lite JLA-8.1000 fixed-angle rotor assembly, rated for 8000 RPM, has a tube angle of 20 degrees from the axis of rotation and is used in Beckman Coulter Avanti JXN-26, J-26S XP series, Avanti J-26 XP series, and discontinued Avanti J-20 series and Avanti J-20 XP series centrifuges. The J-Lite JLA-9.1000 fixed-angle rotor assembly, rated for 9000 RPM, also has a tube angle of 20 degrees from the axis of rotation and is used in all Beckman Coulter Avanti J series centrifuges. These rotors develop centrifugal forces that can efficiently pellet cells from large volumes of culture media, cell particles from tissue homogenates, or subcellular organelles.

The JLA-8.1000 and 9.1000 rotor assemblies consist of a rotor body with attached windshield, a rotor lid and lid knob, and six (JLA-8.1000) or four (JLA-9.1000) removable carbon fiber composite canisters (see Figure 1 and Figure 2). The canisters are interchangeable, allowing the use of multiple sets of canisters with a single rotor body

Figure 1 The JLA-8.1000 Fixed-Angle

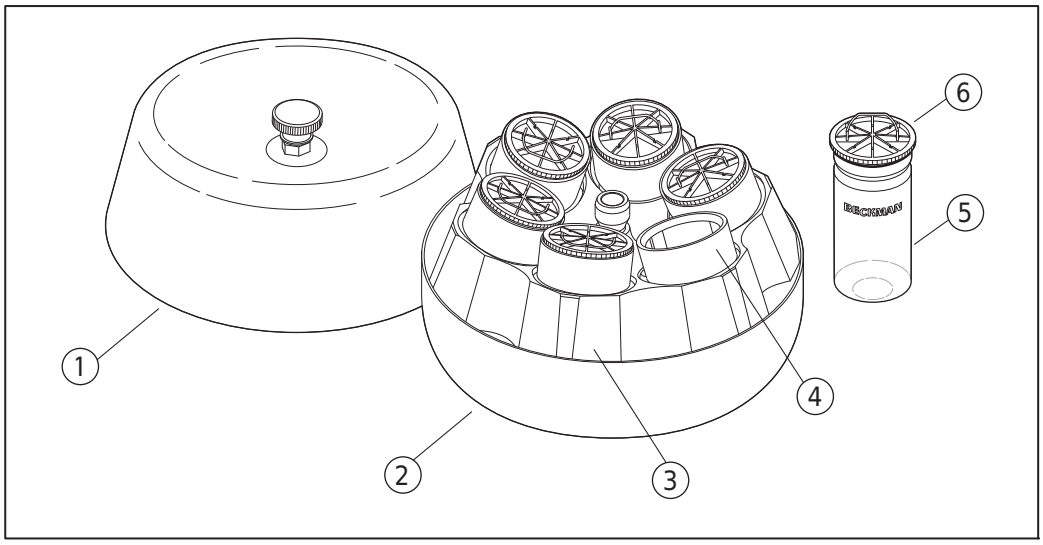

1. Lid
2. Windshield
3. Rotor Body
4. Canister
5. Bottle
6. Cap/Closure

The rotor body, windshield, and lid are made of anodized aluminum. The canisters are made of carbon fiber epoxy composite, with a nickel-plated aluminum sleeve. Two pins in the rotor drive hole seat alongside the centrifuge drive hub teeth, preventing the rotor from slipping during centrifugation. The lid tie-down knob assembly secures the rotor to the centrifuge drive hub.

Figure 2 The JLA-9.1000 Fixed-Angle Rotor

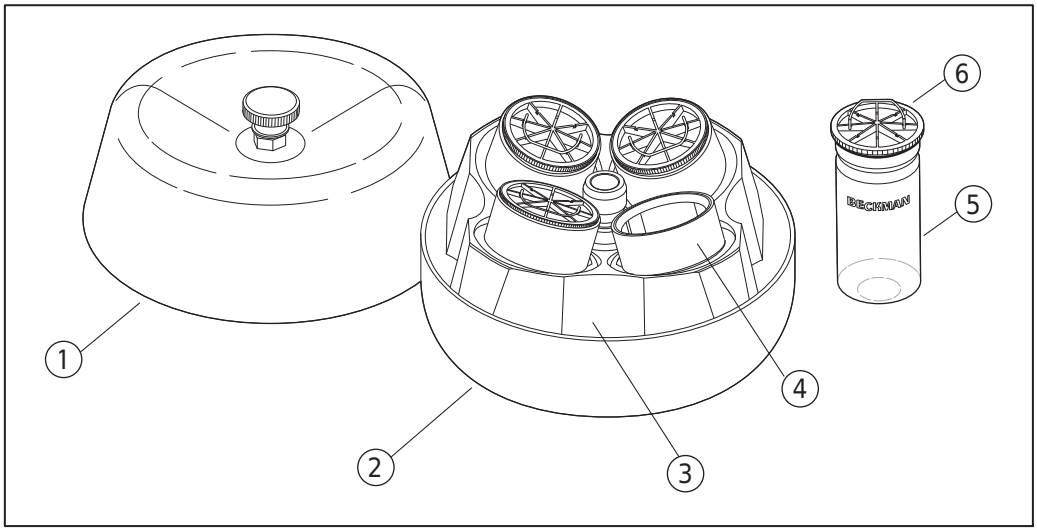

1. Lid
2. Windshield
3. Rotor Body
4. Canister
5. Bottle
6. Cap/Closure

The rotors, with bottle assemblies A98812, A98813, C15121, C15124, C31597 and C31600 have been tested* to demonstrate containment of microbiological aerosols under normal conditions of the associated Beckman Coulter centrifuge when used and maintained as instructed.

For warranty information, see the Warranty at the back of this manual. Each canister is marked with an individual serial number and expiration date; *do not use a canister after the expiration date.*

Preparation and Use

Specific information about the JLA-8.1000 and JLA-9.1000 rotor assemblies is given here. Information common to these and other rotors is contained in the manual *Rotors and Tubes for J Series Centrifuges* (publication JR-IM-10), which should be used together with this manual for complete rotor and accessory information.

NOTE Although rotor components and accessories made by other manufacturers may fit in the JLA-8.1000 and JLA-9.1000 rotors, their safety in these rotors cannot be ascertained by Beckman Coulter. Use of other manufacturers' components or accessories in these rotors may void the rotor warranty and should be prohibited by your laboratory safety officer. Use only the components and accessories listed in this publication in these rotors.

* Validation of microbiological containment was done at an independent third-party testing facility (CAMR, Porton Down, UK, or USAMRIID, Ft. Detrick, MD, U.S.A., or TÜV NORD CERT GmbH Große Bahnstraße 31 Hamburg, Germany). Improper use or maintenance may affect seal integrity and thus containment.

Bottles and Tubes

The JLA-8.1000 and JLA-9.1000 rotor assemblies use the bottles and tubes listed in Table 1. Be sure to use only those items listed and to observe the maximum fill volumes and speed limits shown. Refer to *Chemical Resistances* (publication IN-175) for information on the chemical compatibilities of bottle and accessory materials.

Table 1 Bottles and Tubes Used in the JLA-8.1000 and JLA-9.1000 Rotors

Bottle or Tube			Max Fill Volume (mL)	Required Accessory				
Dimensions and Volume	Description	Part Number		Description	Part Number	Max No. Tubes per Adapter	Max Speed[a]/ RCF/ *k* factor in JLA-9.1000	Max Speed[a]/ RCF/ *k* factor in JLA-8.1000
95 × 191 mm 1000 mL	polypropylene bottle with cap/closure (PPS) and plug (PEI). All USP Class VI material	C31597	1000[bc]	none	—	—	9000/ 16,800/ 2544	8000/ 15,970/ 2482
95 × 191 mm 1000 mL	polycarbonate bottle with cap/closure (PPS) and plug (PEI). All USP Class VI material	C31600	1000[bc]	none	—	—	9000/ 16,800/ 2544	8000/ 15,970/ 2482
95 X 191 mm 1000 mL	polypropylene bottle with cap/closure (PPS) and plug (PPS). All USP Class VI material	B29895 and A98814	1000[bc]	none	—	—	9000/ 16,800/ 2544	8000/ 15,970/ 2482
69 × 160 mm 500 mL	polycarbonate bottle w/cap assy	355605	325	adapter	363683[d]	1	9000 —	8000 —
69 × 160 mm 500 mL	polypropylene bottle w/cap assy	355607	325	adapter	363683[d]	1	8000 —	8000 —
62 × 120 mm 250 mL	polypropylene wide-mouth bottle w/cap assy	356011	250	adapters	362750[d] in 363683[d]	1	9000 —	8000 —
62 × 120 mm 250 mL	polycarbonate wide-mouth bottle w/cap assy	356013	250	adapters	362750[d] in 363683[d]	1	9000 —	8000 —
29 × 104 mm 50 mL	polycarbonate bottle w/liquid-tight cap assy	357000	45	adapters	356996[e] in 363683[d]	1	9000 —	8000 —
29 × 104 mm 50 mL	polypropylene bottle w/liquid-tight cap assy	357001	45	adapters	356996[e] in 363683[d]	1	9000 —	8000 —

Table 1 Bottles and Tubes Used in the JLA-8.1000 and JLA-9.1000 Rotors *(Continued)*

Bottle or Tube			Max Fill Volume (mL)	Required Accessory				
Dimensions and Volume	Description	Part Number		Description	Part Number	Max No. Tubes per Adapter	Max Speed[a]/ RCF/ *k* factor in JLA-9.1000	Max Speed[a]/ RCF/ *k* factor in JLA-8.1000
29 × 104 mm 50 mL	polypropylene bottle w/screw cap	357003	40	adapters	356996[e] in 363683[d]	1	9000 —	8000 —
29 × 104 mm 50 mL	polypropylene thickwall tube w/snap-on cap	357005	36.5	adapters	356996[e] in 363683[d]	1	9000 —	8000 —
				natural 29-mm cap red 29-mm cap green 29-mm cap yellow 29-mm cap blue 29-mm cap	356264[f] 357369[f] 357360[f] 357361[f] 357362[f]			
29 × 104 mm 50 mL	polypropylene thickwall tube, no cap	357007	50	adapters	356996[e] in 363683[d]	1	9000 —	8000 —
29 × 104 mm 50 mL	polycarbonate open-top tube	363647	40	adapters	356996[e] in 363683[d]	1	9000 —	8000 —
29 × 104 mm 50 mL	polycarbonate tube w/snap-on cap	363664	40	adapters	356996[e] in 363683[d]	1	9000 —	8000 —
17 × 119 mm 15 mL	conical polypropylene open-top tube	355663	15	adapters	356960[e] in 363683[d]	5	6500 —	6500 —
Bio-Vials 14 × 55 mm 4 mL	polypropylene, capped	566353	4	adapters	342098[g] in 362750[d] in 363683[d]	1	9000 —	8000 —

a. Maximum speeds listed are guidelines only. These speeds have been achieved in reliability tests at Beckman Coulter, but, because of manufacturing variances, no guarantee of performance is expressed or implied

b. Do not fill above the maximum fill line marked on the bottle.

c. Minimum fill volume for bottles A98812, C15121, C31597 and C31600 is 500 mL; minimum fill volume for bottles A98813, B29896, and C15124 is 1000 mL.

d. Polyethylene terephthalate (PET).

e. Polypropylene.

f. Polypropylene, package of 25.

g. Acetal.

The specially designed Beckman Coulter 1000-mL bottles are sealed using attached plugs and cap/closures (see Figure 3).

Silicone seals on the plug ensure proper containment and performance (*the seals must be free of defects, dry, properly seated, and unlubricated to ensure sealing*).

Bottles may be centrifuged at normal operating temperatures (2° to 25°C). Bottles A98813, B29896, C31597, C13600, and C15124 can be centrifuged up to 38°C), but should be tested under simulated conditions first when working at temperatures below 2°C or above 25°C.

NOTE The useful service life of plastic bottles, plugs, and caps has been tested to 100 hours, but will largely depend on handling and usage. Usage includes, but is not limited to: run, duration, speed settings, temperature settings, cleaning and sterilization methods, and chemicals used. Bottle assembly components that show signs of visible wear, damage, stress, or deformation should be replaced. *Do not use damaged components.* We highly recommend that you pretest labware in the rotor using water samples to determine your optimal operating conditions.

The manufacturing process can cause small cosmetic flaws on polycarbonate and polypropylene bottles. These flaws, which may appear as irregular or scraped surface areas, are cosmetic only. They do not affect the function nor shorten the life of the bottle.

Figure 3 1 000-mL Bottle Assemblies Used in the JLA-8.1000 and JLA-9.1000 Rotor Assemblies*

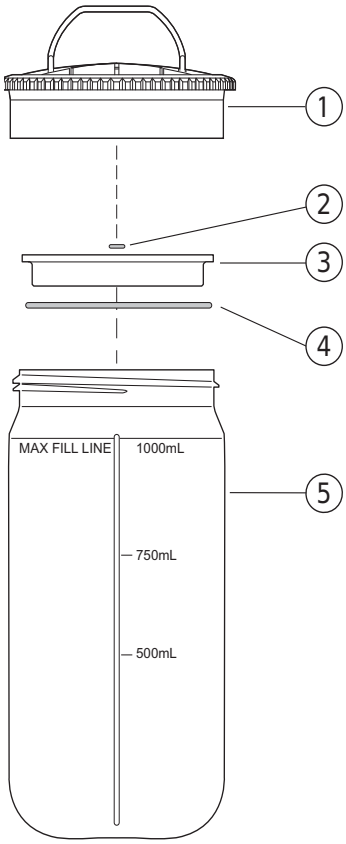

1. Cap/Closure
2. AutoVent Plug O-ring
3. AutoVent Plug
4. Quad Ring or Plug O-ring
5. Bottle, 1000 mL
   (polycarbonate or polypropylene)

A six-place rack (974627) for carrying the bottles is provided with labware kit 392574. Extra racks may be ordered.

* See the *Supply List* for part numbrs.

Bottle Rack (974627)

The 500-mL adapter (363683, see Figure 4) enables the use of 500-mL, 250-mL, 50-mL, and 15-mL bottles and tubes, and Bio-Vials. Labware smaller than 500 mL must be placed in another adapter, or in more than one other adapter, before being placed in the 500-mL adapter. See Table 1 for a list of bottles, tubes, and adapters that can be used.

Figure 4 The 500-mL Adapter for the JLA-8.1000 and JLA-9.1000 Rotors

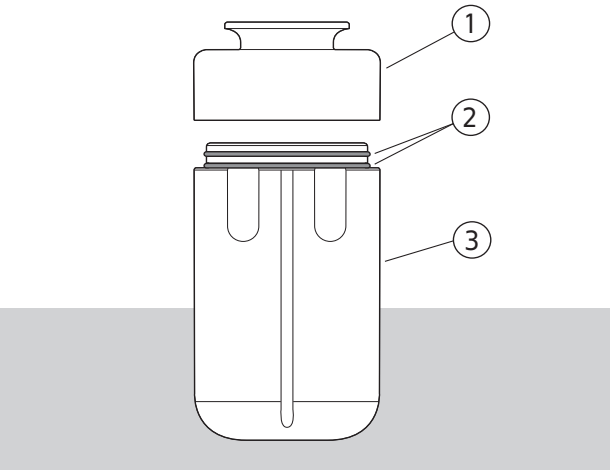

1. Adapter Cap
2. Adapter O-rings (970883)
3. Adapter Body

1L HarvestLine System Liners

The 1L HarvestLine System, consisting of polyetherurethane liners that are placed inside the rotor bottles, is available for use with the JLA-8.1000 and JLA-9.1000 rotors. The HarvestLine System provides a convenient method of loading, recovering, and storing samples. The 1L liners are loaded with sample through a funnel or fermentor hose. A valve in the liner neck is sealed, and the liner necks are folded to fit inside the 1000-mL bottles. The bottles are sealed with rotor plugs and cap/closures, and the sealed bottles are placed into the rotor canisters for centrifugation. After centrifugation, the liner valves are cut off and the supernatant is decanted, either for storage or disposal. The liners can then be heat-sealed for pellet storage or disposal.

This rotor manual does not contain instructions for use of the HarvestLine System. HarvestLine System instructions are contained in *1L HarvestLine System Liners Instructions For Use* (J-TB-093).

Prerun Safety Checks

Read the Safety Notice section at the front of this manual before using the rotor.

1. Make sure that the rotor and lid are clean and show no signs of corrosion or cracking.

2. Inspect the canisters for damage (see *About Composite Canisters*, later in this manual).

3. Before each use, inspect each bottle, cap/closure, and plug for cracks or damage.

   Do not use damaged components.

4. Check the chemical compatibilities of all materials used.

   Refer to *Chemical Resistances* (publication IN-175), included in the *Rotors and Tubes* CD.

5. Use only the bottles, tubes, and adapters listed in Table 1.

Rotor Preparation

1. Before each run, make sure the rotor is seated on the centrifuge drive hub, with the rotor drive pins alongside the teeth on the top surface of the hub, and that the lid knob is tight.

2. If you run less than a full load, arrange the loaded canisters opposite each other in the rotor and place empty canisters in the other cavities.
   - **a.** Fill opposing bottles to the same level with liquid of the same density.
   - **b.** *Place a canister, loaded or empty, in each rotor position during a run.*

3. Make sure the plug and cap/closure O-rings are in good condition, are properly installed, and are completely *dry and unlubricated*.

   If the O-rings or the sealing area are wet, bottle leakage may result.

   O-RIngs should be replaced after 50 hours of use.

4 For low-temperature runs (from approximately 2° to 10°C), precool the rotor, canisters, labware, and sample in the centrifuge or in a refrigerator before use, especially before short runs.

A suggested rotor precooling cycle is a minimum of 30 minutes at 2000 RPM at the required temperature.

Installing the Rotor

1 Hold the rotor by the scalloped areas between the canister cavities and carefully lower the rotor straight down onto the centrifuge drive hub (see Figure 5).

Do not hold the rotor by the windshield during installation

NOTE Do not drop the rotor onto the hub or the hub could be damaged.

⚠ WARNING

If the rotor is left in the centrifuge between runs, make sure the rotor is seated on the drive hub and the tie-down knob is tight before each run.

Figure 5 Installing the Rotor (JLA-9.1000 shown)

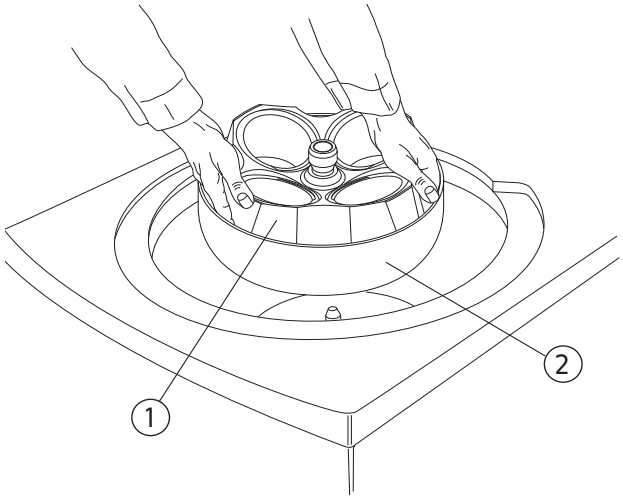

1. Rotor Scallop
   (four total on JLA-9.1000
   six on JLA-8.1000)
2. Windshield

2 Turn the rotor slightly around the centrifuge drive hub to ensure that the rotor is properly seated.

3 After canisters are installed, place the lid on the rotor and tighten the lid tie-down knob to secure the rotor to the centrifuge drive hub.

Loading the Canisters

NOTE canisters run in opposite positions in the rotor must balance to within 30 grams of each other. Load opposing canisters with the same type of labware containing the same amounts of fluid of equal density.

Do not exceed the rated maximum sample load for any single canister, which is 1500 grams (3.3 lb), including bottle, sample, plug, and cap/closure.

Working with Physiological Fluids

⚠ WARNING

Handle body fluids with care because they can transmit disease. No known test offers complete assurance that they are free of micro-organisms. Some of the most virulent — Hepatitis (B and C) viruses, HIV (I–V), atypical mycobacteria, and certain systemic fungi — further emphasize the need for aerosol protection. Take appropriate safety precautions when handling toxic, pathogenic, or other hazardous materials.

When working with potentially hazardous materials, always fill and open containers in an appropriate hood or biological safety cabinet. In addition, it is strongly recommended that all containers carrying physiological fluids be capped to prevent leakage.

Loading the 1000-mL Bottle and Labware Assemblies

1 Inspect the bottles that you will be using, especially in the areas shown in the illustration.

Do not use bottles that are cracked or deformed.

2 Fill a bottle with sample.

Do not fill above the maximum fill line marked on the bottle.

See Table 1 for complete fill volume and run speed information.

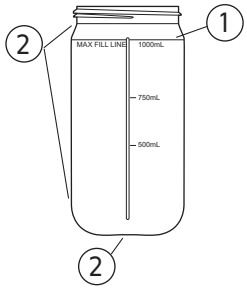

1. Do not fill above this line
2. Inspect here

3 Regularly inspect the cap/closure you will be using.

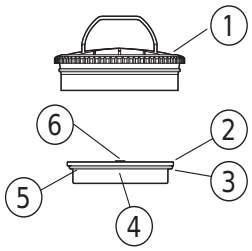

1. Cap/Closure
2. Plug
3. Quad Ring or Plug O-ring
4. Plug/Bottle Interface
5. Inspect here
6. AutoVent Plug O-ring

a. Regularly inspect the plug in the areas behind the O-ring for cracking.

b. Make sure that the seals are in place and in good condition, and that for the plug, both the seal and the plug/bottle interface are completely dry.

c. Make sure that the large and small plug seals are in place.

d. *Do not lubricate the seals.*

---

4 Place a plug on the bottle.

a. Then place a cap/closure over the plug and tighten firmly by hand.

You cannot over tighten the closure by hand.

Tools are available to assist in tightening and loosening cap/closures.

See *Cap/Closure Tightening Tools* below.

---

5 Place the filled, sealed labware assembly into an empty canister, using a twisting motion to ensure proper seating.

a. Place the canister into a cavity in the installed rotor. When loading the bottle assembly into the rotor, always orient the fill line indicator on the side of the bottle at 90 degrees relative to the axis of rotation.

⚠ CAUTION

Bottles MUST be placed into canisters. NEVER place a bottle directly into a rotor cavity.

---

6 Repeat steps 1 through 5 for all of the bottles to be run.

---

7 Make sure that a canister is installed in every rotor position (run empty canisters without cap/closures).

Opposing filled canisters, plus labware and sample, must weigh within 30 grams of each other.

Cap/Closure Tightening Tools

It is very important that bottles be tightly sealed to 60 in*lbs minimum before a run to prevent leakage. Some users may find it difficult to hand-tighten the parts adequately. The tools below are designed to simplify tightening and loosening cap/closures.

Tools List

- 366770 – Includes Bottle grip and plastic molded wrench (Figure 6)

Figure 6 PN 366770

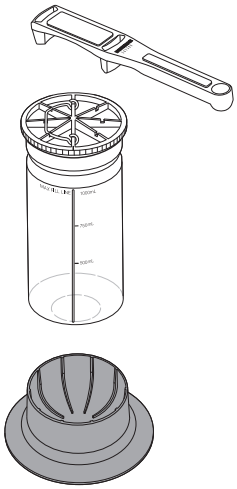

- 392574 – Includes spatula, 6-place bottle carrying rack, bottle grip and plastic molded wrench
- C24141 – Includes torque tool adapter and torque wrench. (For use with assemblies C15128, B29895, B29896, C15121, and C15124 only) (*PN C24141*Figure 7)

Figure 7 PN C24141

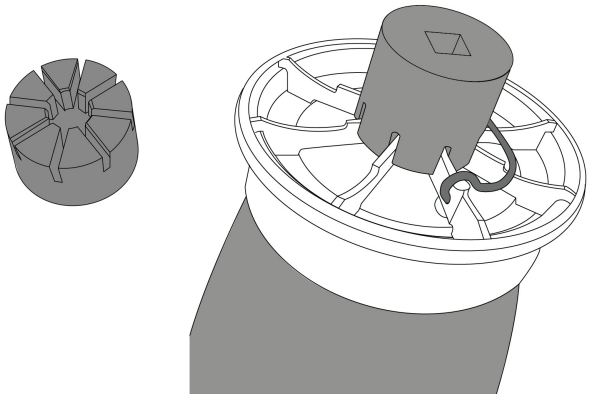

- C57474 – Includes torque tool adapter. (For use with assemblies C31597, C31600, C31602, and C31603)

- 858121 – Includes a metal torque wrench meter which assures accurate torque readings. (Figure 8)

Figure 8 PN 858121

1 Inspect all parts as described in *Loading the 1000-mL Bottle and Labware Assemblies*, above.

2 Place an empty bottle in the bottle gripper.

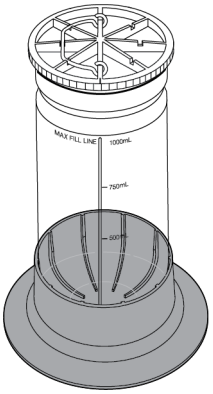

The bottle grip seats on any flat surface and holds the bottle snugly in place, leaving both hands free for loading and sealing. It is not necessary to affix the grip to the surface; pressing down as you turn the cap/closure prevents the grip from moving.

3 Fill the bottle.

4 Place a plug on the bottle.

5 Place a cap/closure over the plug.

6 Tighten the cap/closure.

Without the Wrench

Grasp the cap/closure with both hands, push down for leverage, and turn the cap/closure to the right (clockwise) until the cap is as tight as possible.

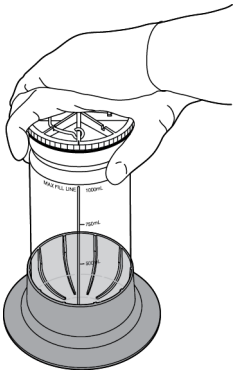

Using the Wrench

NOTE The wrench provides additional leverage for tightening and loosening the cap/closure.

Hold the narrow end of the wrench in one hand and insert the two prongs in any position in the top of the cap/closure. Place your other palm on the flat textured area over the prongs. Press down with your palm and tighten the cap/closure the cap is as tight as possible. Loosen sealed bottles by pressing down and turning the wrench to the left (counterclockwise) (see Figure 6 above).

NOTE For bottle assemblies, C31597 AND C31600, torque the closure to a minimum of 60 in*lbs. All other 1000mL bottles, torque to a minimum of 110 in*lbs.

NOTE Use a wrench to tighten the 1L (1000 mL) bottles.

7 Remove the bottle from the bottle grip, load it into a canister, and then into the rotor. When loading the bottle assembly into the rotor, always orient the fill line indicator on the side of the bottle at 90 degrees relative to the axis of rotation.

Loading the 500-mL Adapters

1 Prepare the 500-mL adapter by making sure that the two O-rings are in place as shown in Figure 4.

Do not lubricate the O-rings.

2 Fill and seal the bottles or tubes to be used in the 500-mL adapters.

3 If 500-mL bottles are used, place each bottle directly into a 500-mL adapter.

a. For bottles of different sizes, first load the bottles into the adapters listed in Table 1 and then place the filled bottle/adapter assembly into the 500-mL adapters.

Do not load sample directly into the 500-mL adapter.

4 Place the adapter cap on the adapter, push down, and twist.

The bottom edge of the adapter cap will not touch the top of the adapter, but the assembly is sealed by the O-rings and will seal completely during centrifugation.

5 *Hold the adapter by the adapter body, not by the adapter cap*, and place the filled adapter into a canister.

No special orientation of the adapter in the canister is required.

Make sure that six canisters are loaded into the JLA-8.1000 rotor, or four canisters in the JLA-9.1000 rotor, prior to centrifugation.

Temperature

Enter the run temperature according to the instructions in your centrifuge instruction manual.

NOTE To ensure that the rotor assembly reaches the required temperature during the run, precool or prewarm the rotor, canisters, labware, and sample to the required run temperature before starting the run.

Removal and Sample Recovery

⚠ CAUTION

If disassembly reveals evidence of leakage, you should assume that some fluid escaped the rotor. Apply appropriate decontamination procedures to the ultracentrifuge and accessories.

Removing 1000-mL Bottles

1 Unscrew the rotor lid knob.

Remove the lid and set it aside.

2 Grasp the metal handle on top of each cap/closure and, using a lifting and twisting motion, lift the sealed bottle assemblies out of each canister.

If required, place the sealed bottles under a safety hood before removing the cap/closures and plugs.

Use caution when opening the sealed assemblies.

Removing Pellets from 1000-mL Bottles

1 Use the spatula provided to remove pellet from the bottle.

Do not use a metal tool to remove pellet, as metal could scratch or damage the bottle and shorten the bottle's useful life.

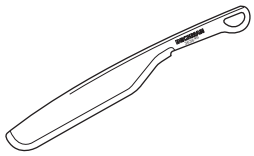

Spatula for removing pellets (363646)

Removing 500-mL Adapters

1 After centrifugation, remove the 500-mL adapters from the canisters by grasping each adapter cap top and pulling up until you can grasp the adapter body.

Then, holding the adapter body, remove the adapter completely and set it on a flat surface.

2 To remove the adapter cap, hold the adapter firmly in one hand and, with the other hand, twist and lift off the cap.

Placing your fingers in the indentations in the adapter may help you to grip the adapter tightly.

Some users may find the adapter caps difficult to remove.

To facilitate removal, use the bottle grip tool described above.

Run Times

The *k* factor of the rotor is a measure of the rotor's pelleting efficiency. Beckman Coulter has calculated the *k* factors for all of its rotors, at maximum rated speed with full tubes or bottles, using the following formula:

$$k = \frac{\ln(r_{max}/r_{min})}{\omega^2} \times \frac{10^{13}}{3600}$$ **EQ 1**

where ω is the angular velocity of the rotor in radians per second (ω = 0.105 × RPM), r_{max} is the maximum radius, and r_{min} is the minimum radius.

After substitution:

$$k = \frac{(2.533 \times 10^{11})\ln(r_{max}/r_{min})}{RPM^2}$$ **EQ 2**

In the JLA-8.1000 rotor, the *k* factor is 2482 for full 1000-mL bottles at 8000 rpm. In the JLA-9.1000 rotor, the *k* factor is 2544 for full 1000-mL bottles at 9000 RPM. At reduced speeds, the *k* factors will be different. Calculate *k* factors for these containers using EQ 2.

Use the *k* factor in the following equation to estimate the run time *t* (in hours) required to pellet particles of known sedimentation coefficient *s* (in Svedberg units, *S*).

$$t = \frac{k}{s}$$ **EQ 3**

Run times can be estimated for centrifugation at less than maximum speed by adjusting the *k* factor as follows:

$$k_{adj} = k\left(\frac{8000^*}{\text{actual run speed}}\right)^2$$ **EQ 4**

*for the JLA-8.1000 rotor; 9000 for the JLA-9.1000 rotor.

Run times can also be estimated from data established in prior experiments using a different rotor if the *k* factor of the previous rotor is known. For any two rotors, a and b:

$$\frac{t_a}{t_b} = \frac{k_a}{k_b}$$ **EQ 5**

Run Speeds

The centrifugal force at a given radius in a rotor is a function of speed. Comparisons of forces between different rotors are made by comparing the rotors' relative centrifugal fields (RCF). When rotational speed is adjusted so that identical samples are subjected to the same RCF in two different rotors, the samples are subjected to the same force. The RCF at a number of rotor speeds is provided in Table 2.

Do not select rotational speeds that exceed the limits in Table 1.

When solutions more dense than 1.2 g/mL are centrifuged in the JLA-8.1000 rotor, use EQ 6 to calculate the reduced maximum allowable rotor speed. Use EQ 7 to calculate the reduced maximum allowable rotor speed for the JLA-9.1000 rotor.

$$\text{reduced maximum speed} = (8000\ \text{RPM}^*)\sqrt{\frac{1.2\ \text{g/mL}}{\text{density of tube contents}}}$$ **EQ 6**

$$\text{reduced maximum speed} = (9000\ \text{RPM*})\sqrt{\frac{1.2\ \text{g/mL}}{\text{density of tube contents}}} \qquad \text{EQ 7}$$

*The maximum speed for 1000-mL polypropylene bottles (363678) is 7000 RPM in the JLA-8.1000 and 8000 RPM in the JLA-9.1000.

Table 2 Relative Centrifugal Fields for the JLA-8.1000 and JLA-9.1000 Rotors[a]

JLA-8.1000 Rotor			
Rotor Speed (RPM)	Relative Centrifugal Field (× *g*)		
	At r_{max} (222.8 mm)	At r_{av} (171 mm)	At r_{min} (119 mm)
8000	15,970[b]	12,300	8530
7000	12,200	9380	6530
6000	8950	6900	4800
5000	6220	4790	3330
4000	3980	3060	2130
3000	2240	1720	1200
2000	995	766	533
1000	249	192	133
500	62	48	33

JLA-9.1000 Rotor			
Rotor Speed (RPM)	Relative Centrifugal Field (× *g*)		
	At r_{max} (185 mm)	At r_{av} (134 mm)	At r_{min} (82 mm)
9000	16,800	12,200	7440
8000	13,300	9610	5880
7000	10,200	7350	4500
6000	7460	5400	3310
5000	5180	3750	2300
4000	3320	2400	1470
3000	1870	1350	830
2000	829	600	370
1000	207	150	92
500	52	38	23

a. Entries in this table are calculated from the formula RCF = $1.12r\ (\text{RPM}/1000)^2$ and then rounded to three significant digits.

b. Not rounded.

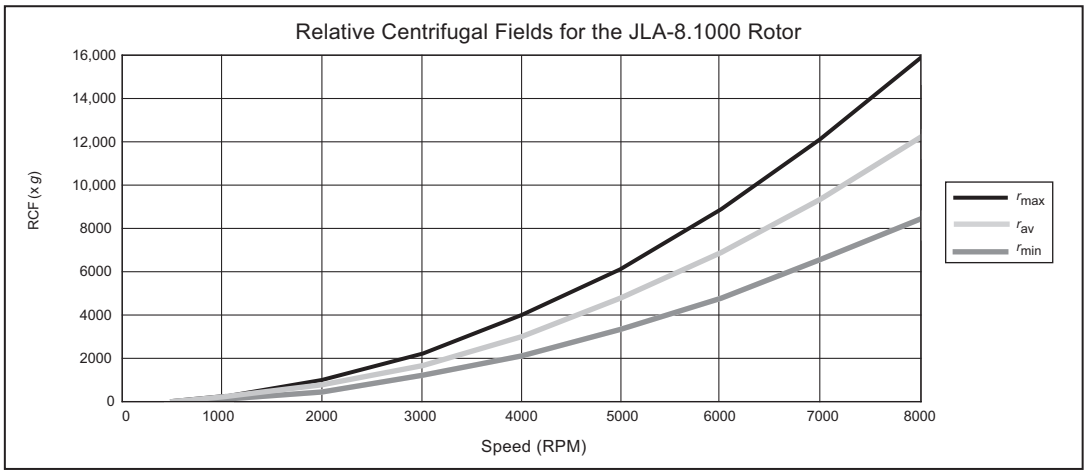

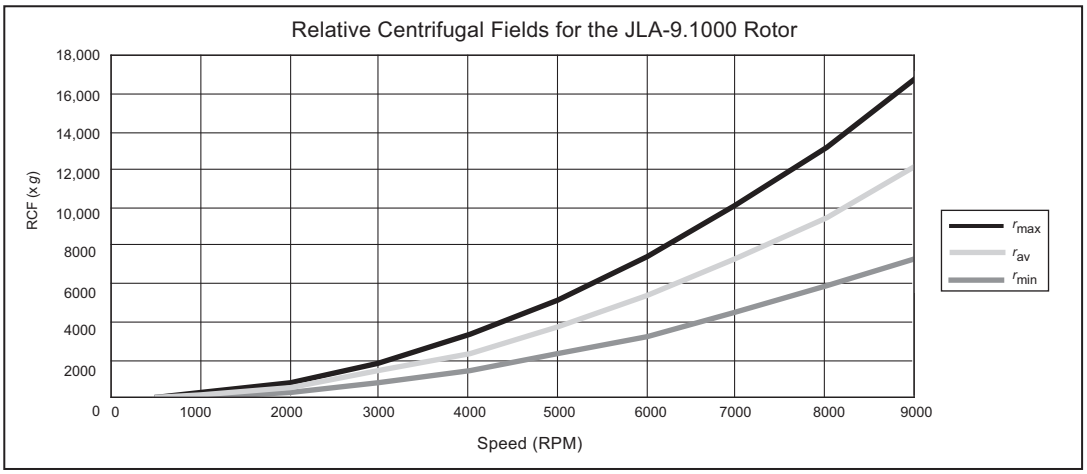

Care and Maintenance

Cap/Closure and Plug Inspection and Maintenance

Plug and cap/closure performance depend on proper use and maintenance.

1 Check the O-rings before each use to make sure that they are in good condition and are completely dry.

Replace the O-rings if they are damaged, torn, or dirty.

Seal integrity is the key to successful function of plug assemblies.

2 Do not lubricate the plug seals.

If they are lubricated, they will cause the assembly to seal too tightly during centrifugation.

3 If crazing or cracks appear on or in a cap/closure or plug, replace the cap/closure and plug immediately with a new cap/closure and plug assembly.

Do not continue to use damaged or suspect cap/closures, plugs, or other assembly components.

Replace labware assemblies at the first sign of damage to any of the components.

Canister Inspection and Maintenance

Regularly inspect each canister as described below.

1 Before each use, inspect the canisters (363686) for deep cracks.

If any cracking or other damage is visible on the outside wall, *do not use the canister.*

Contact Beckman Coulter Field Service.*

2 **If a crack or blemish appears after a canister is dropped from a height of several feet, or after it strikes a sharp edge of a bench or table, autoclave the canister and then return it to Beckman Coulter for inspection.**

Include a written explanation of the reason for the return.

3 Each canister has an expiration date, which is engraved on the aluminum sleeve around the top of the canister (see Figure 9). *Do not use the canister after this date.*

Figure 9 canister Sleeve Washer

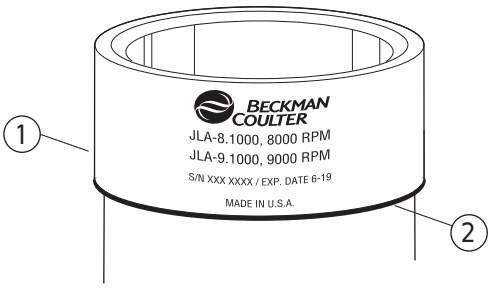

1. Aluminum Sleeve
2. Sleeve Washer (363601)

New canisters can be used with the same rotor body.

See the Warranty at the back of this manual for more information.

4 Each canister has a polyetherimide (PEI) sleeve washer (363601) beneath the aluminum sleeve (see Figure 9), which acts as a cushion between the canister and the rotor body.

Before each use, make sure that the sleeve washer is securely in place.

* Call 1-800-742-2345 (U.S.A. or Canada) outside the U.S., contact your local Beckman Coulter office, or visit us on the web at www.beckman.com.

If the canister is exposed to high temperatures and/or autoclaving, the washer may loosen; if this happens, press it back into place with your finger.

If the washer becomes deformed so that it no longer stays on the canister, replace it.

About Composite Canisters

The carbon fiber epoxy composite material used in the JLA-8.1000 and JLA-9.1000 canisters is extremely strong and ideally suited to the high stresses produced by centrifugal force. The canisters will retain their strength throughout their 7-year life, but will exhibit certain cosmetic changes with time. The canisters also require different inspection and handling procedures than all-metal rotor components.

After several thousand centrifuge run cycles, surface cracks may appear in the canister dome area (see Figure 10) and may increase in number with continued use. Surface cracks are not uncommon in carbon fiber components, and *do not affect the structural integrity of the canister.* However, cracks or other damage on the outside wall should be inspected by a Beckman Coulter representative.

Repeated autoclaving of the canisters may cause the following conditions, all of which are cosmetic in nature during the 7-year warranty period:

- an increase in the number of surface cracks in the dome area,
- increased visibility of existing surface cracks,
- a change in canister color due to oxidation of the epoxy, and
- formation of a white, powdery residue on the outside wall of the canister; this residue can be wiped off with a soft, damp cloth.

Repeated autoclaving may also cause the sleeve washer (363601) to deform so that it no longer stays on the canister. If this happens, replace the washer.

Figure 10 canister Dome Area

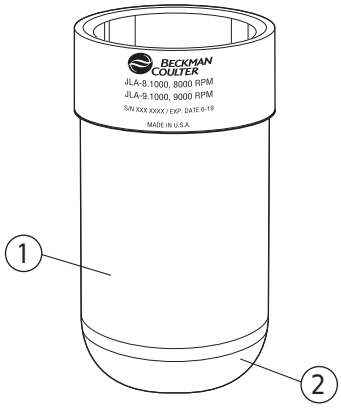

1. Outside Wall
2. Dome Area

Rotor Body Inspection and Maintenance

1 Periodically (at least monthly) inspect the rotor body for rough spots, pitting, or heavy discoloration.

If any of these signs are evident, do not use the rotor.

Contact Beckman Coulter Field Service for information about the Field Rotor Inspection Program (FRIP) and the rotor repair center.*

2 Before using the rotor, inspect the rotor drive pins to ensure that they are not damaged.

Damaged drive pins can prevent the rotor from seating properly on the centrifuge drive hub (Avanti J series centrifuges only).

To inspect the drive pins, turn the rotor upside down and look into the drive hole in the center of the rotor.

If the drive pins appear damaged, contact Beckman Coulter Field Service.

3 Do not use sharp tools on the aluminum rotor body, as corrosion begins in scratches and may open fissures in the metal with repeated use.

If the rotor body is scratched, contact Beckman Coulter Field Service about having it re-anodized.

Do not use sharp objects or tools on the composite canisters, as the composite material is easily damaged.

4 To prevent corrosion of the aluminum rotor body, store the rotor in a dry environment with the lid removed.

Do not store the rotor in the centrifuge.

5 To prevent abrasion of the metal rotor tie-down components, place the rotor lid upside down on a flat surface and put two or three drops of Tri-Flow† oil (883371) between the lid adapter and the lid stem (see Figure 11).

This area should be lubricated every few weeks or after each autoclave cycle.

* Call 1-800-742-2345 (U.S.A. or Canada) outside the U.S., contact your local Beckman Coulter office, or visit us on the web at www.beckman.com.

† Manufactured by Thompson & Formby, Inc., 10136 Magnolia Drive, Olive Branch, MS 38654, U.S.A.

Figure 11 Lubricating the Lid Stem

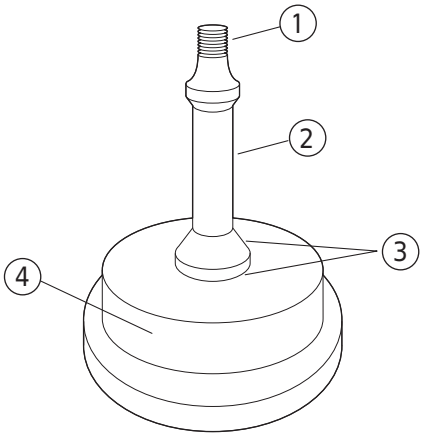

1. Lubrication Area (Spinkote)
2. Lid Stem
3. Lubricaton Points (Tri-Flow)
4. Lid Adapter

6 To provide lubrication between the rotor and the centrifuge drive hub, apply a thin coat of Spinkote lubricant (306812) to the threads of the rotor tie-down knob before each run.

7 If the rotor is left in the centrifuge between runs, leave the centrifuge power off and the door open.

Refer to *Chemical Resistances* (In-175) for chemical compatibilities of rotor and accessory materials. Your Beckman Coulter representative provides contact with the Field Rotor Inspection Program and the rotor repair center.

Cleaning

Wash the rotor and rotor components immediately if salts or other corrosive materials are used or if spillage has occurred. Do not allow corrosive materials to dry on the rotor.

Under normal use, wash the rotor frequently (at least weekly) to prevent buildup of residues.

1 Wash the rotor, canisters, plugs, cap/closures, and 500-mL adapters and adapter caps in a mild detergent, such as Solution 555 (339555), that will not damage the rotor and components.

Dilute the detergent with water (10 parts water to 1 part detergent).

The Rotor Cleaning Kit (339558) contains two special plastic-coated brushes and two quarts of Solution 555 for use with rotors and accessories.

2 O-rings on the 500-mL adapters can be left in place during cleaning unless spillage has occurred. To remove them, use fingers or a tool that will not damage the O-rings.

Thoroughly wash and dry them before replacing them on the adapter.

Do not lubricate adapter O-rings.

3 Thoroughly rinse the cleaned rotor and components with distilled water.

4 Air-dry the rotor, lid, and canisters upside down.

Do not use acetone to dry rotor components.

⚠ CAUTION

Do not wash the rotor components or accessories in a dishwasher. Do not soak components in detergent solution for long periods of time, such as overnight.

Do not use acetone, methyl ethyl ketone (MEK), chloroform, cyclohexane, or organic solvents on the canisters at any time. These substances will damage the epoxy resin surface material.

Decontamination

If the anodized aluminum rotor body becomes contaminated with radioactive material, it should be decontaminated using a solution that will not damage the anodized surfaces. Beckman Coulter has tested a number of solutions and found several that do not harm anodized aluminum: RadCon Surface Spray or IsoClean Solution (for soaking),* and Radiacwash.†

⚠ CAUTION

IsoClean can cause fading of colored anodized surfaces. Use it only when necessary and remove it promptly from rotor surfaces.

For radioactive decontamination of the canisters, RadCon Surface Spray and Radiacwash can be used. Do not soak the canisters in these solutions for long periods; *use the minimum immersion times specified by the solution manufacturers.*

While Beckman Coulter has tested these methods and found that they do not damage components, no guarantee of sterility or disinfection is expressed or implied. Consult your laboratory safety officer regarding the proper decontamination methods to use.

If the rotor or other components are contaminated with toxic or pathogenic materials, follow appropriate decontamination procedures as outlined by your laboratory safety officer. Refer to *Chemical Resistances (IN-175)* to evaluate your rotor's ability to withstand a given chemical solution.

* In the United States, contact Nuclear Associates (New York); in Eastern Europe and Commonwealth States, contact Victoreen GmbH (Munich); in South Pacific, contact Gammasonics Pty. Ltd. (Australia); in Japan, contact Toyo Medic Co. Ltd. (Tokyo).

† In the United States, contact Biodex Medical Systems (Shirley, NY); internationally, contact the U.S. office to find the dealer nearest you.

⚠ CAUTION

Strongly alkaline solutions will damage the rotor body.

Sterilization and Disinfection

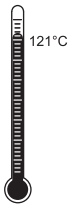

The rotor body, canisters, cap/closures, polypropylene bottles, O-rings, and polyetherimide (PEI) plugs can be autoclaved at 121°C for up to 20 minutes. Remove canisters from the rotor body during autoclaving. Place polypropylene bottles into the autoclave upside down to prevent bottle deformation.

The 500-mL adapter, adapter cap, and O-rings can be autoclaved at 121°C for 15 minutes. Repeated autoclaving will reduce the life of these components. For this reason, cold sterilization methods are recommended.

Do not autoclave polycarbonate bottles, the polyethylene bottle rack (974627), or the spatula (363646). Use cold sterilization methods as described below.

Low concentrations of hydrogen peroxide (less than 6%) and bleach (less than 10%) may be used on all rotor components, bottles, and accessories. Ethanol (70%) may be used on all rotor components except the polycarbonate bottles and plugs. Hydrogen peroxide and bleach may cause discoloration and corrosion of the anodized rotor surfaces. Use the minimum exposure time for each solution, rinse thoroughly with distilled water, and dry with a soft cloth, per laboratory standards.

⚠ CAUTION

Ethanol is a flammability hazard. Do not use it in or near operating centrifuges.

No guarantee of sterility or disinfection is expressed or implied through the use of these disinfection methods.

When sterilization or disinfection is a concern, consult your laboratory safety officer regarding proper methods to use.

Refer to publication IN-192 (included with each box of tubes) for tube sterilization and disinfection procedures.

Returning a Rotor

Before returning a rotor or accessory for any reason, prior permission must be obtained from Beckman Coulter, Inc. A return authorization form may be obtained from your local Beckman Coulter sales office. The return form should contain the following information:

- rotor type and serial number,
- history of use (approximate frequency of use),
- reason for the return,
- original purchase order number, billing number, and shipping number, if possible,
- name and email address of the person to be notified upon receipt of the rotor or accessory at the factory,
- name and email address of the person to be notified about repair costs, etc.

To protect our personnel, it is the customer's responsibility to ensure that all parts are free from pathogens and/or radioactivity. Sterilization and decontamination must be done before returning the parts. Smaller items (such as tubes, bottles, etc.) should be enclosed in a sealed plastic bag.

All parts must be accompanied by a note, plainly visible on the outside of the box or bag, stating that they are safe to handle and that they are not contaminated with pathogens or radioactivity. ***Failure to attach this notification will result in return or disposal of the items without review of the reported problem.***

Use the address label printed on the return form when mailing the rotor and/or accessories.

Customers located outside the United States should contact their local Beckman Coulter office.

Supply List

See the Beckman Coulter *High Performance, High Speed, High Capacity Rotors, Tubes & Accessories* catalog (BR-8102) available at www.beckman.com/techdocs, call Beckman Coulter Customer Service at 1-800-742-2345 (U.S.A. or Canada), or contact your local Beckman Coulter Representative for detailed information about ordering parts and supplies For your convenience, a partial list is given below.

Replacement Rotor Parts and Labware

NOTE In the kits and assemblies listed below, cap/closures, plugs, and adapters are shipped with the O-rings installed and one spare of each O-ring is provided.

Description	Part Number
Bottle assembly, 1000-mL polycarbonate made from USP Class VI material, set of two includes: • 1000-mL polycarbonate bottles, set of two (366751) • Cap/closure and plug assemblies, set of two **NOTE** These caps and plugs cannot be interchanged with any other cap or plug combination.	C31600
Bottle assembly, 1000-mL polypropylene made from USP Class VI material, set of two includes: • 1000-mL polypropylene bottles, set of two • Cap/closure and plug assemblies, set of two **NOTE** These caps and plugs cannot be interchanged with any other cap or plug combination.	C31597
Bottle assembly, 1000-mL polypropylene made from USP Class VI material with polyphenylene sulfide cap/closure, set of two includes: • 1000-mL polypropylene bottles, set of two (A98814) • Cap/closure and plug assemblies (PPS), set of two (B29895)	B29895 and A98814
Labware Kit includes: • Bottle rack, holds six 1000-mL bottles) • One spatula • One tool kit (366770)	392574
Bottle rack (holds six 1000-mL bottles	974627
Canisters, set of two	363686
Canister sleeve washer, set of six	363601
Lid assembly, JLA-8.1000	363563
Lid assembly, JLA-9.1000	363583
Tool Kit includes: • One bottle grip • One wrench (367309)	366770

Description	Part Number
1000 mL Bottle Torque Tool Kit includes: • 1000 mL Torque Tool • 1000 mL Bottle Torque Tool Adapter	C24141
Torque Wrench, 3/8” Square Drive	858121
500 mL Adapter assembly includes: • Adapter, polyethylene teraphthalate (PET) • One adapter cap, polycarbonate • One adapter O-rings, silicone, set of two (replacement part number 970883)	363683

Description	Part Number
Labware Replacement Part Numbers for Bottle Assemblies C31597 and C31600 **NOTE** These caps and plugs cannot be interchanged with any other cap or plug combination	
Cap/closure and plug assembly, set of two includes: • Two cap/closures • Two Autovent plugs Assemblies • Two additional large plug Rings • Two additional Autovent plug O-rings	C31602
Plug assembly, Autovent PEI, set of two includes: • Two Autovent plugs with seals • Two additional large plug Quad rings • Two additional Autovent plug O-rings	C31604
Cap/closure replacement assembly, set of six	C31603
Labware Replacement Part Numbers for Bottle Assemblies C15121 and C15124	
Cap/closure and plug assembly, set of two includes: • Two cap/closures • Two AutoVent plugs Assemblies • Two additional large plug Quad Rings • Two additional AutoVent plug O-rings	C15128
Plug assembly, AutoVent polypropylene, set of two includes: • Two polypropylene AutoVent plugs with seals • Two additional large plug Quad Rings • Two additional AutoVent plug O-rings	C15127
Bottles, 1000-mL polycarbonate, set of two	366751
Bottles, 1000-mL polypropylene, set of two	A98814
Cap/closure replacement assembly, set of six	B29894
AutoVent plug replacement seals, set of six includes: • Six large plug Quad Rings • Six AutoVent plug O-rings	C15126

Description	Part Number
Labware Replacement Part Numbers for Bottle Assemblies A98812 and A98813	
Cap/closure and plug assembly, set of two includes: • Two cap/closures • Two AutoVent polypropylene plugs with O-rings • Two additional large plug O-rings • Two additional AutoVent plug O-rings	A99028
Plug assembly, AutoVent polypropylene, set of two includes: • Two polypropylene AutoVent plugs with O-rings • Two additional large plug O-rings • Two additional AutoVent plug O-rings	393898
Bottles, 1000-mL polycarbonate made from USP Class VI material, set of two	366751
Bottles, 1000-mL polypropylene made from USP Class VI material, set of two	A98814
Cap/closure replacement assembly made from USP Class VI material, set of six	B10317
AutoVent plug replacement O-rings made from USP Class VI material, set of six includes: • Six large plug O-rings (A98818) • Six AutoVent plug O-rings (A98816)	B10320
Labware Replacement Part Numbers for Bottle Assemblies B29896	
Cap/closure and plug assembly, set of two includes: • Two cap/closures • Two AutoVent polypropylene plugs with O-rings • Two additional large plug O-rings • Two additional AutoVent plug O-rings	B29895
Plug assembly, AutoVent polypropylene, set of two includes: • Two polypropylene AutoVent plugs with O-rings • Two additional large plug O-rings • Two additional AutoVent plug O-rings	393898
Bottles, 1000-mL polypropylene made from USP Class VI material, set of two	A98814
Cap/closure replacement assembly made from USP Class VI material, set of six	B29894
AutoVent plug replacement O-rings made from USP Class VI material, set of six includes: • Six large plug O-rings (A98818) • Six AutoVent plug O-rings (A98816)	B10320

Supplies

NOTE For MSDS information, go to the Beckman Coulter website at www.beckman.com/techdocs.

Description	Part Number
Rotor Cleaning Kit	339558
Solution 555 (1 qt)	339555
Spinkote lubricant (2 oz)	306812
Spatula, polyethylene (for removing pellet from 1000-mL bottles)	363646
Polytetrafluorethylene (PTFE) spray	366772
Tri-flow lubricant (2 oz)	883371

NOTE Suggested Permanent Marking Pens: Sanford Laundry Marking Pen, item #31161, black; Sanford Permanent Metallic Marker, item #76115, gold; Sanford Permanent Metallic Marker, item #68820, silver.

Beckman Coulter, Inc.
JLA-8.1000 and JLA-9.1000 Rotor Warranty

Subject to the conditions specified below and the warranty clause of the Beckman Coulter terms and conditions of sale in effect at the time of sale, Beckman Coulter, Inc., agrees to correct either by repair, or, at its election, by replacement, any defects of material or workmanship which develop within seven (7) years after delivery of the JLA-8.1000 or JLA-9.1000 rotor to the original buyer by Beckman Coulter or by an authorized representative, provided that investigation and factory inspection by Beckman Coulter discloses that such defect developed under normal and proper use. Should a Beckman Coulter centrifuge be damaged due to a failure of a rotor covered by this warranty, Beckman Coulter will supply free of charge all centrifuge parts required for repair.

Replacement

Any product claimed to be defective must, if requested by Beckman Coulter, be returned to the factory, transportation charges prepaid, and will be returned to Buyer with the transportation charges collect unless the product is found to be defective, in which case Beckman Coulter will pay all transportation charges.

A defective rotor will be replaced by Beckman Coulter at its then current list price less a credit based upon the age of the rotor (years since date of purchase). The Buyer shall not receive credit until the claimed defective rotor is returned to Beckman Coulter's Indianapolis, Indiana facility, or delivered to a Beckman Coulter Field Service representative.

The replacement price (cost to Buyer) for the respective rotor shall be calculated as follows:

$$\text{Replacement price} = \text{Current rotor list price} \times \frac{\text{years}}{7}$$

Conditions

1. Except as otherwise specifically provided herein, this warranty covers the JLA-8.1000 and the JLA-9.1000 rotor only and Beckman Coulter shall not be liable for damage to accessories or ancillary supplies including but not limited to (i) bottles, (ii) bottle contents, (iii) cap/closures, or (iv) plugs.
2. This warranty is void if the rotor has been subjected to customer misuse such as operation or maintenance contrary to the instructions in the Beckman Coulter rotor or centrifuge manual.
3. This warranty is void if the JLA-8.1000 or JLA-9.1000 rotor is operated with a rotor drive unit or in a centrifuge unmatched to the rotor characteristics, or is operated in a Beckman Coulter centrifuge that has been improperly disassembled, repaired, or modified.
4. Each canister, whether purchased with a complete rotor assembly or purchased separately, is covered by this warranty for seven (7) years from the date of purchase, and will be replaced or repaired during such period according to the terms and conditions of this warranty.
5. A canister should not be used after the expiration date marked on the canister. If the marked date is fewer than 7 years from the date of purchase, the expiration date becomes the date of purchase plus 7 years. Use of a canister after such expiration date voids Beckman Coulter's warranty obligations with respect to any rotor and/or centrifuge in which such a canister is used.

Disclaimer

IT IS EXPRESSLY AGREED THAT THE ABOVE WARRANTY SHALL BE IN LIEU OF ALL WARRANTIES OF FITNESS AND OF THE WARRANTY OF MERCHANTABILITY AND THAT BECKMAN COULTER INC., SHALL HAVE NO LIABILITY FOR SPECIAL OR CONSEQUENTIAL DAMAGES OF ANY KIND WHATSOEVER ARISING OUT OF THE MANUFACTURE, USE, SALE, HANDLING, REPAIR, MAINTENANCE, OR REPLACEMENT OF THE PRODUCT.

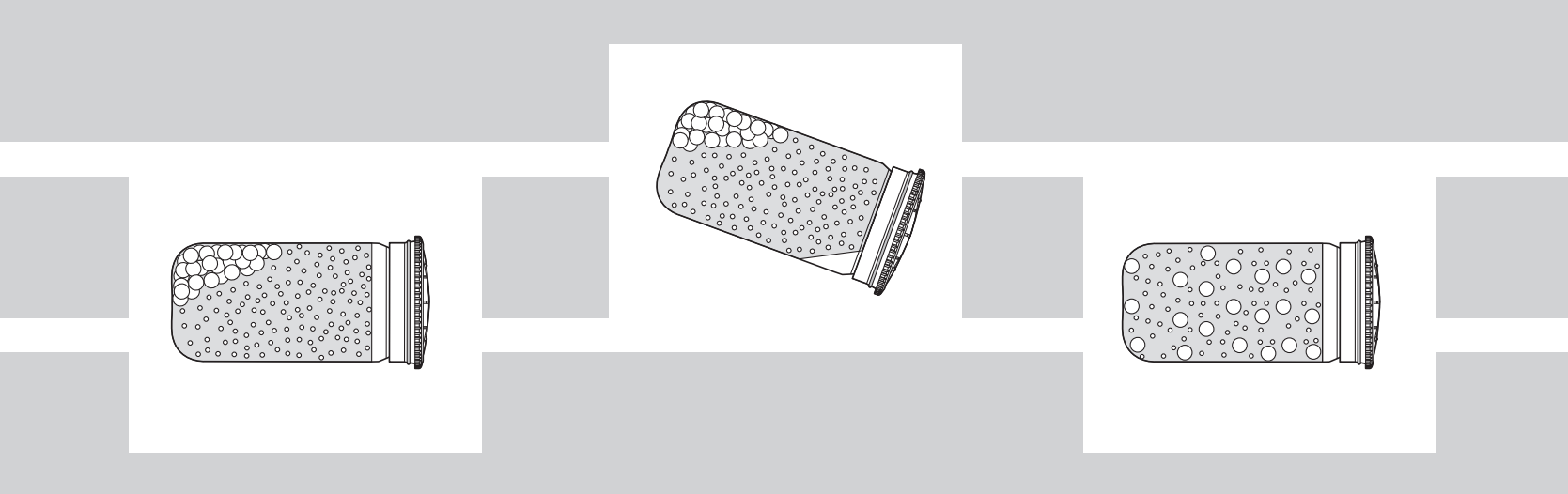

Related Documents

Rotors and Tubes for J2, J6, and Avanti J Series Centrifuges (JR-IM-10)

- Rotors
- Tubes, Bottles, and Accessories
- Using Tubes, Bottles, and Accessories
- Using Fixed-Angle Rotors
- Using Swinging-Bucket Rotors
- Using Vertical-Tube and Rack-Type Rotors
- Care and Maintenance
- Chemical Resistances for Beckman Coulter Centrifugation Products
- Temperature Compensation Tables
- Gradient Materials
- Blood Component Separation
- References
- Glossary

Available in hard copy or electronic pdf by request.

Rotors and Tubes CD (369668)

- Rotors and Tubes for Tabletop Preparative Ultracentrifuges
- Rotors and Tubes for J2, J6, Avanti J Series Centrifuges
- Rotors and Tubes for Preparative Ultracentrifuges
- Rotor Safety Bulletin
- Chemical Resistances for Beckman Coulter Centrifugation Products

Included with shipment of instrument.

Additional References

- Chemical Resistances for Beckman Coulter Centrifugation Products (IN-175)
- Beckman Coulter High Performance, High Speed, High Capacity Rotors, Tubes & Accessories catalog (BR-8102)
- 1L HarvestLine System Liners (J-TB-093)
- Use and Care of Centrifuge Tubes and Bottles (IN-192)

Available in hard copy or electronic pdf by request, also available at www.beckman.com/techdocs

© 2023 Beckman Coulter, Inc.
All Rights Reserved